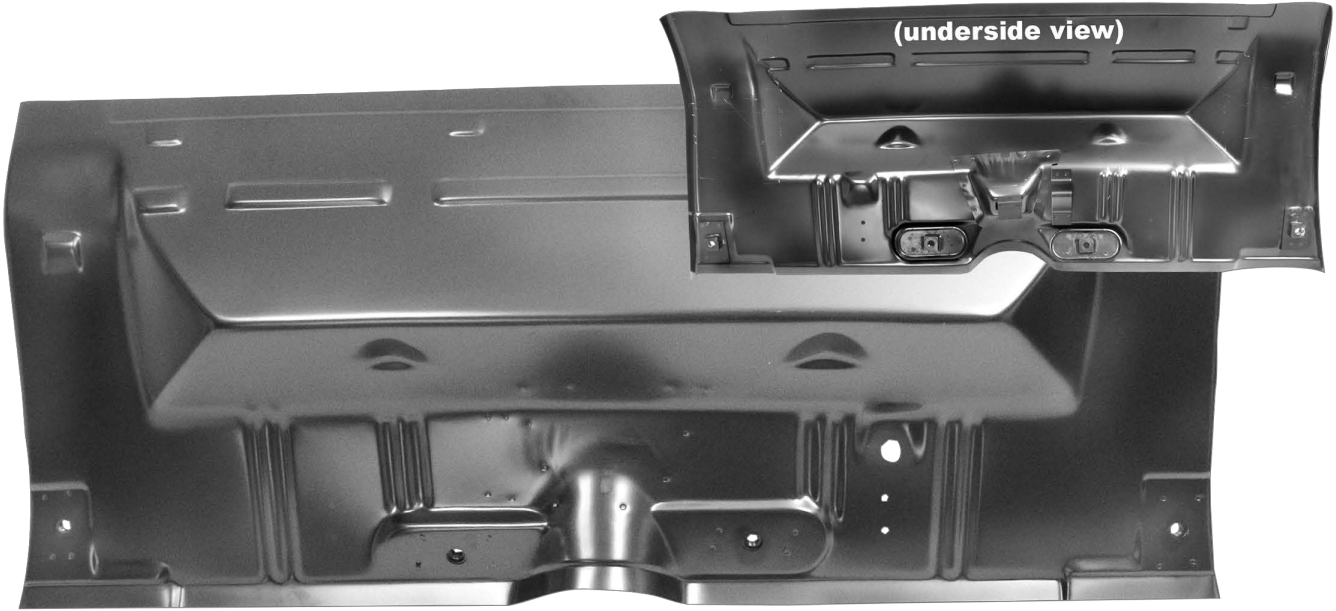
(underside view)