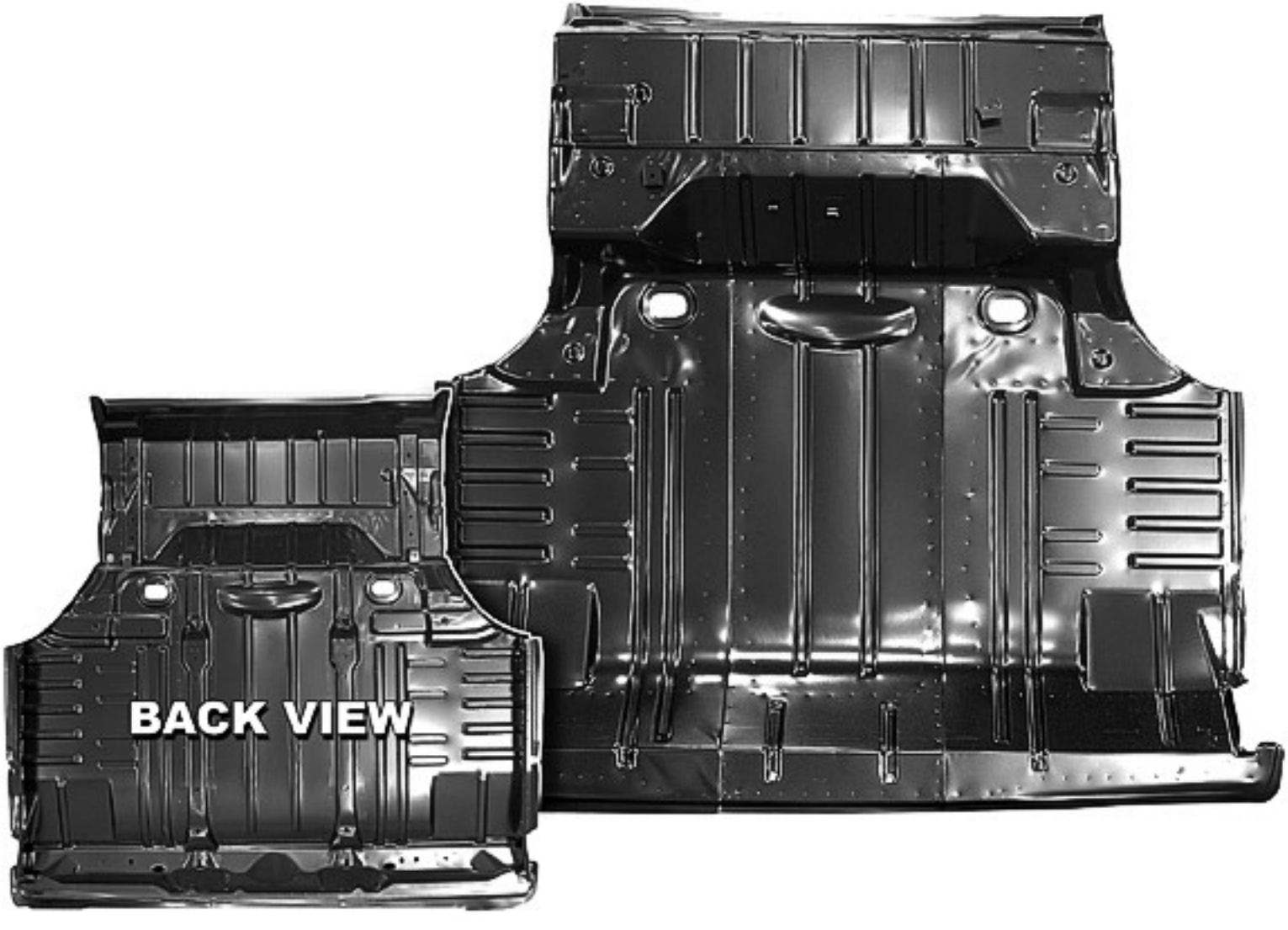
BACK VIEW